SASSY STOOL



SASSY STOOL

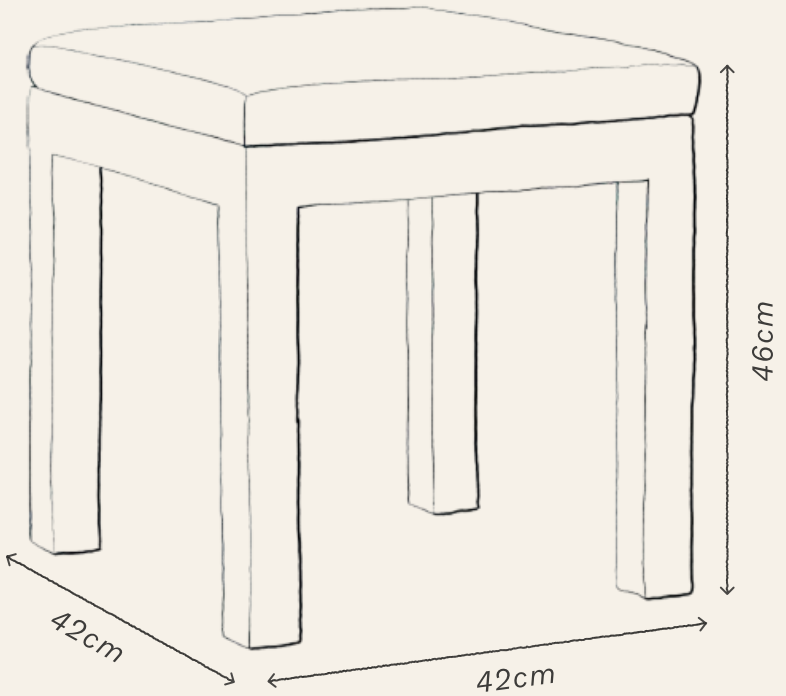

Our Sassy Stool features a simple frame, complimented by clean upholstery. It is handmade in the UK as the perfect occasional chair or perch. It is available in Woodland Rose in *Biscuit & Blush* and Two Tone Ticking in *Indigo & Red.*

DIMENSIONS

Width	42m
Height	46.5cm
Depth	42cm

LEAD TIME

Approximately 8-10 weeks

N.B

This product is handmade in England

FABRIC OPTIONS

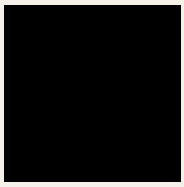

WOODLAND ROSE IN *BISCUIT & BLUSH*

TWO TONE TICKING IN *INDIGO & RED*

Our Sassy Stool can be upholstered in a fabric of your choice. Please enquire.
Fabric Requirements: 2m

CARE

Upholstery: Clean according to fabric specifications.

All drawings, concepts and ideas herein are the intellectual property right of Studio Atkinson and are subject to international copyright and intellectual property law.

S · A

www.studio-atkinson.com
@studioatkinson
sales@studio-atkinson.com